LAUNDRY PRO 3.0

WITH ACTIVEPURE® TECHNOLOGY

Cold Water Laundry System

Read manual carefully for proper use and optimal operation.

General Information

Product Overview

The ActivePure Laundry Pro 3.0 is designed to work in conjunction with your washing machine, using cold water and our proprietary ActivePure® Technology to clean clothes, without the need for detergent, softeners, or bleach. As your washer begins to fill, the Laundry Pro 3.0 will turn on. The Laundry Pro 3.0 is equipped with an internal leak sensor and is intended to work with residential clothes washers only. Please read and follow all safety warnings and instructions outlined in this manual before installing or performing maintenance.

Contents

Product Overview 2
Specifications 2
Storage and Disposal 2
Important Safety Instructions 3
Installation Requirements 4
Before You Start 5
Removing Cover 5
Installation of Wall Anchors or Screws (Horizontal) 6
Installation of Wall Anchors or Screws (Vertical) 7
Installation of the Leak Detector 8
Reinstall the Cover 8
Connecting the Pressure Reducer 9
Hose Installation 10
Connecting the Power Adapter 11
System Set Up 11
Installation Problems? 11
Before Washing Clothes 12
Using Your ActivePure Laundry Pro 3.0 12
For Washers That Require Hot & Cold Water Input 13
Temperature Controlling Water Valves 14
Optional ActiveClean Port (Available Separately) 14
Status Indications 14
Replacing the ActivePure Cell Assembly 15
Frequently Asked Questions 17
Troubleshooting 18
Replacement Parts 20
Warranty Information 20
FCC Declaration & Responsible Party 21

Storage and Disposal

Do not dispose of this product as household waste. Electrical waste and electronic products should be appropriately recycled as required by practices established by your local authority.

EPA Est. 87327-VA-1

If you have any questions concerning this product, please contact your Sales Representative or Customer Service at 800.572.1446 or email customerservice@ActivePure.com.

Specifications

ActivePure Laundry Pro 3.0

- Sales Number: 00811
- Model Number: W1019A

Technology

- ActivePure Technology

Electrical

- Input Voltage: 100-240 Volts; 50/60 Hz; 0.45 Amps
- Output Voltage: 12 Volts DC; 2.5 Amps
- Power: 0.4 Watts AC (standby); 1.3 Watts AC (operating)

Water Pressure

- Min. 20 psi to 60 psi
- Max./1.37~4.13 bar

Water Temperature

- Use cold water only

Weight & Dimensions

- 4.3 lbs (2.0 kg)
- 5.2” H x 17.3” W x 3.7” D (13.5 cm x 43.9 cm x 9.4 cm)

Operating Temperature

- 50˚F - 100˚F (10 ˚C - 37.8 ˚C)

Operating Humidity

- 40% - 85%

Warranty

- Limited three (3) year warranty
- Terms and conditions may apply

We reserve the right to change or modify any specification without notice.

Fill In and Save

Record information regarding your new ActivePure Laundry Pro 3.0 here. Retain for future reference.

Model No._____ Serial No. _____ Date of Purchase_____

Name: _____ Phone No._____

Address: _____

Sales Representative: _____

Important Safety Instructions

WARNING	• **To prevent unnecessary risk of fire, electrical shock, or personal injury, all wiring must be done in accordance with the National Electrical Code ANSI/FNPA, No. 70 - Latest Revision and local codes and ordinances in the USA; for Electrical Codes outside the USA, consult your local regulatory agency for the latest codes and ordinances; it is the personal responsibility and obligation of the appliance owner to provide adequate electrical service for this appliance** • **Electrical shock hazard; you can be killed or seriously injured if you don't follow instructions**
CAUTION	• **We strongly recommend that a licensed plumber installs the ActivePure Laundry Pro 3.0** • **Water pressure MUST be checked and within stated specs before installation** • **Water Pressure Reducer MUST be used (included)** • **Water treated by your ActivePure Laundry Pro 3.0 unit is intended for clothes washing only and is NOT approved for any internal consumption such as drinking, bathing, brushing teeth, etc;** • **DO NOT drink, ingest, or internally consume the water from your ActivePure Laundry Pro 3.0 unit or washing machine; DO NOT provide water from your ActivePure Laundry Pro 3.0 to your pets or other animals** • **Damage to your appliance or the surrounding area can occur if you don't fully follow instructions**

Read this manual in its entirety prior to installing or using your ActivePure Laundry Pro 3.0.
Keep out of the reach of children

- For indoor use only
- Water pressure **MUST** be checked and within stated specs before installation
- Water Pressure Reducer **MUST** be used (included)
- **DO NOT** operate unit with cover removed
- Disconnect all power before servicing
- **DO NOT** use an extension cord or other adapter with this appliance
- This appliance is not recommended for use with high sediment content water; if your water has a high sediment content, we offer a separate optional Pre-filter Kit (see page 20)
- Use the new hose included with the unit, when connecting the ActivePure Laundry Pro 3.0 to your washing machine; you should also replace any washing machine hose that is more than 3 years old
- **DO NOT** clean the cover of your ActivePure Laundry Pro 3.0 with harsh chemicals, abrasives, or cleansers; to clean, use a soft cloth dampened with water
- ActivePure Laundry Pro 3.0 is designed for normal residential use only; use in a commercial or non-residential setting may damage the unit and will void your warranty

NOTE: **Your ActivePure Laundry Pro 3.0 Unit was factory tested. It is normal for some residual water to still remain in the unit as a result of these tests.**

Save these instructions.

Installation Requirements

WARNING

Never use an extension cord.

CAUTION

- **We strongly recommend that a licensed plumber installs the ActivePure Laundry Pro 3.0**
- **Water pressure MUST be checked and within stated specs before installation**
- **A Pressure Reducer is included with unit and must be installed before operating**
- **It is essential to install the included in-line pressure reducer before setting up your ActivePure Laundry Pro 3.0; not adhering to this requirement could lead to water leakage, property damage, personal injury, and damage the product; please ensure that the incoming water pressure is above 20 psi/1.37 bar to allow the ActivePure Laundry Pro 3.0 to function correctly; insufficient water pressure may hinder the unit's performance and could potentially cause issues with your washing machine's water valve**
- **The washer's water valve may also not shut off completely; check the documentation supplied with your washing machine for exact specifications; your washing machine and cold water faucet must be within 4 feet of the right side of the unit to use the inlet hose provided with your ActivePure Laundry Pro 3.0**
- **TO AVOID THE POSSIBILITY OF WATER DAMAGE, SHOULD A HOSE LEAK, ALWAYS HAVE FAUCETS ACCESSIBLE AND TURN OFF FAUCETS WHEN WASHER IS NOT IN USE; DO NOT USE WITH A CARBON FILTER**

ELECTRICAL REQUIREMENTS

100-240 Volt 50/60 Hz 5 AMP (minimum) Fuse or Circuit Breaker. ActivePure Laundry Pro 3.0 is equipped with an AC to DC power supply.

WATER REQUIREMENTS

A water pressure greater than 20 psi / 1.37 bar and less than 60 psi / 4.13 bar is required to correctly operate your ActivePure Laundry Pro 3.0.

LOCATION CONSIDERATIONS

The ActivePure Laundry Pro 3.0 must never be installed in areas where water may freeze since the unit will always maintain some water in the unit, the water valve, and hose areas. **DO NOT** install where the temperature will get below 40°F (4.4°C) or in areas with high humidity. This can cause damage to internal components. It is also recommended to avoid installation in areas of high humidity, as it can effect the operation of the unit.

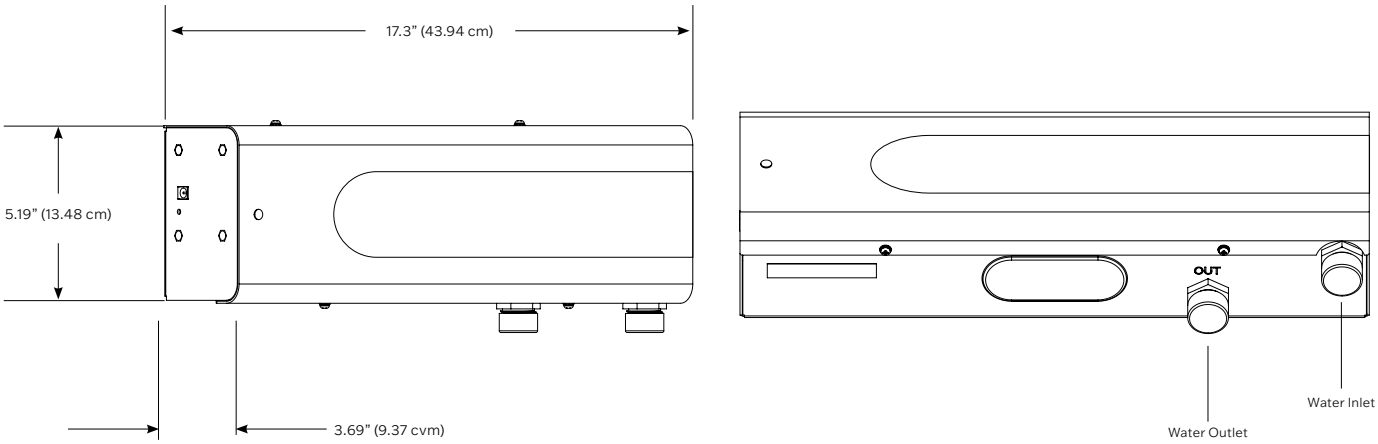

Before You Start

CAUTION

Your ActivePure Laundry Pro 3.0 unit was factory tested. It is normal for some residual water to still remain in the unit as a result of these tests.

- Remove your new ActivePure Laundry Pro 3.0 from its packaging
- Inspect the unit for any signs of shipping damage

Removing Cover

1. Remove the two (2) cover screws located on the bottom of the unit.

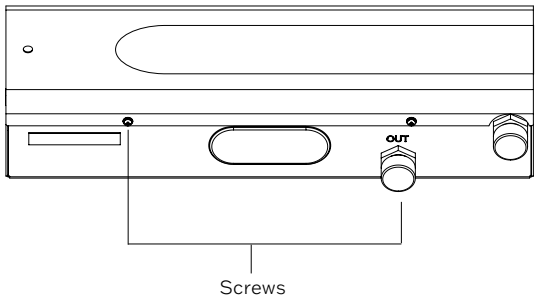

2. Remove the two (2) screws (not shown) along the top of the ActivePure Laundry Pro 3.0.

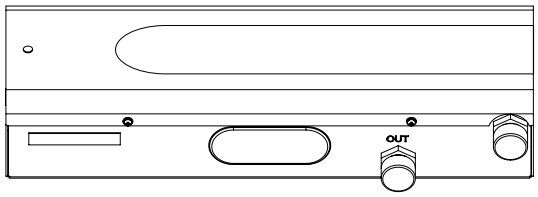

3. To remove the cover, pull the top away from the unit, then lift off the cover.

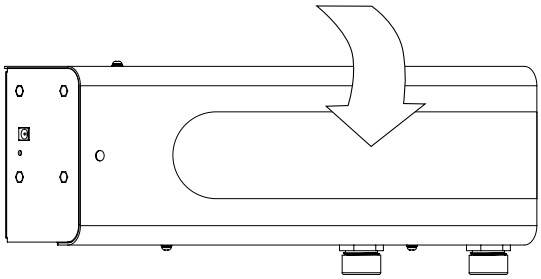

Installation of Wall Anchors or Screws (Horizontal)

1. Place the ActivePure Laundry Pro 3.0 to the wall, making sure the unit is level, and mark the appropriate keyholes with a pencil.

NOTE: Washing machine and cold water faucet must be within 4 feet (1.21 m) of the right side of unit.

- If using supplied wall anchors, drill two 3/16" (4.76 mm) diameter holes. Place two wall anchors into the wall. Install two supplied screws and tighten until almost all the way in.

- If mounting to wall studs, drill two 3/32" (2.381 mm) diameter holes approximately 1" (25.4 mm) deep. Install two supplied screws and tighten until almost all the way in.

2. Position the keyholes of the ActivePure Laundry Pro 3.0 onto the screws (not shown). Finish tightening screws enough to securely mount unit, but still allowing it to be removed from wall. Remove unit from wall.

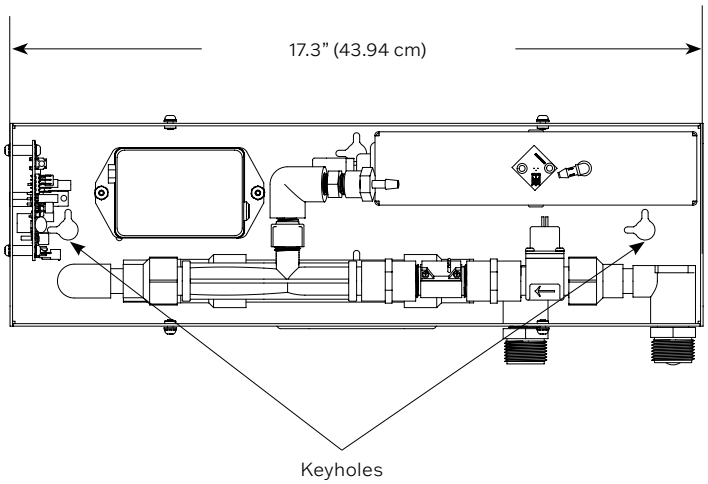

VERTICAL INSTALLATION

When installing unit in a vertical position, unit needs to be level vertically and use the optional Leak Sensor (sold separately).

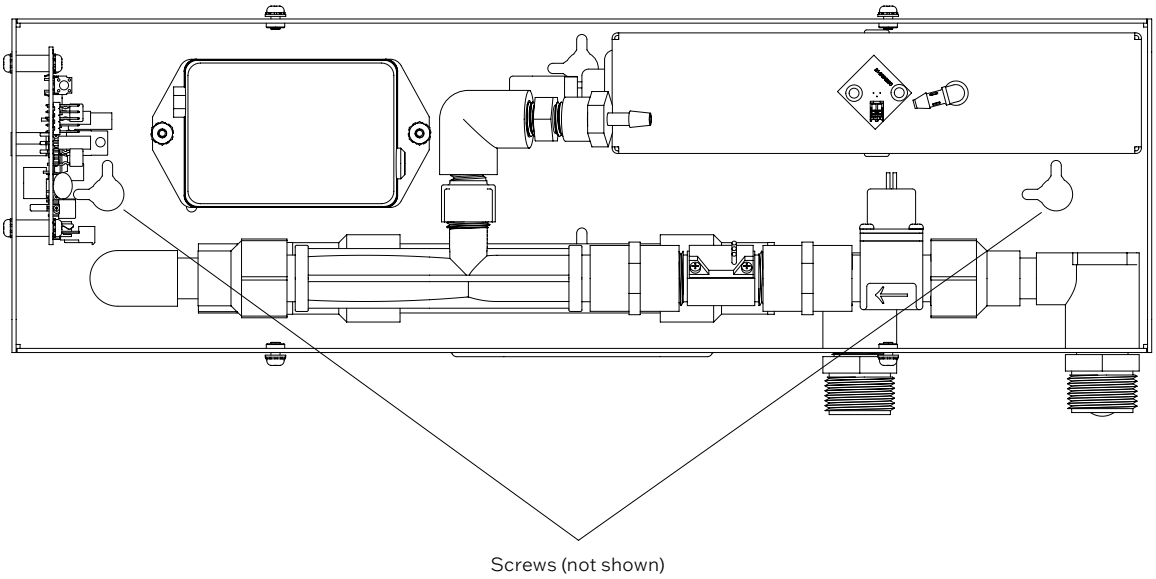

Installation of Wall Anchors or Screws (Vertical)

1. Place the ActivePure Laundry Pro 3.0 to the wall in vertical position, making sure the unit is plumb, and mark the appropriate keyholes with a pencil. **(Figure A)**

2. When mounting the Laundry unit in a vertical position, it must be oriented in the manner shown, with the adapter plug (PC board) at the top and the IN/OUT Valves at the lower left. **(Figure B)**

NOTE: Washing machine and cold water faucet must be within 4 feet (1.21 m) of the bottom of the Laundry unit.

- If using supplied wall anchors, drill two 3/16" (4.76 mm) diameter holes. Place two wall anchors into the wall. Install two supplied screws and tighten until almost all the way in.

- If mounting to wall studs, drill two 3/32" (2.381 mm) diameter holes approximately 1" (25.4 mm) deep. Install two supplied screws and tighten until almost all the way in.

NOTE: The hardware kit provided in the Laundry unit package contains adhesive backed rubber spacers to be placed on back of unit to provide additional clearance from the wall if needed for hose installation or the use of ActiveClean Port. (see page 14)

3. Position the keyholes of the ActivePure Laundry unit onto the screws (not shown). Finish tightening screws enough to securely mount unit but still allowing it to be removed from the wall.

4. Remove unit from wall.

Figure A

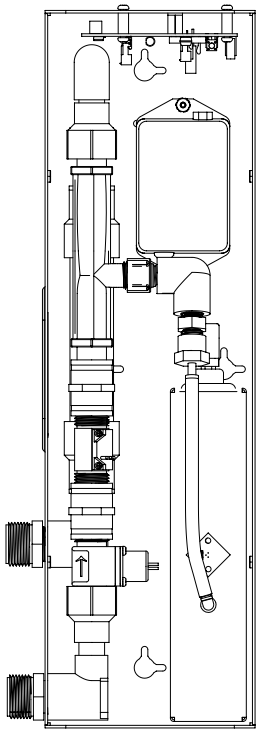

Figure B

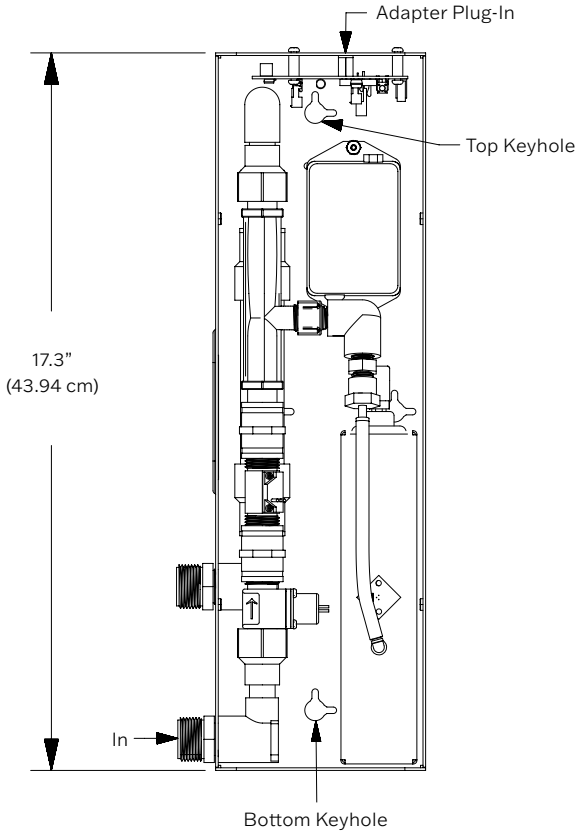

Installation of the Leak Detector

1. Remove the backing from one side of the double-sided tape (included). Apply double-sided tape onto the bottom (plain, smooth side) of the green PCB of the leak detector wire assembly. **(Figure C)**

2. Remove the backing from the application side of the double-sided tape. Apply the leak detector PCB onto the bottom panel (right-side panel if mounted horizontally), in approximate area as shown. (Figure D) Wipe away any oil or dirt from this area of the panel before applying the tape for a more secure adhesion. The factory-applied horizontal mounted leak sensor will be on the left side panel of the now vertical-oriented unit.

3. Plug the leak detector pin into the receptacle on the Laundry unit's PC Board. Receptacle is located near the corner.

NOTE: Plug the vertical mount wire pin into OPEN receptacle on the PC Board NEXT TO the factory-installed horizontal leak sensor. Plug into the board labeled "H2" or "H3", whichever receptacle is available.

4. Both Sensors can operate as normal if plugged into either "H2" or "H3". **(Figure E)**

5. Use tie-wrap as needed to secure wires away from Cell Assembly, to not hinder Cell Assembly replacement.

Figure C

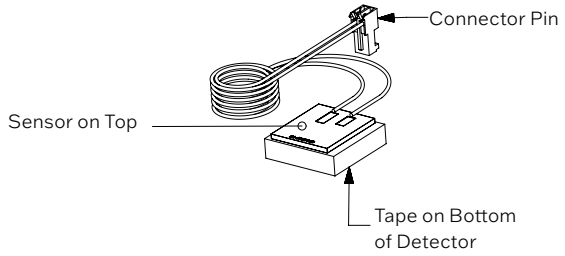

Figure D

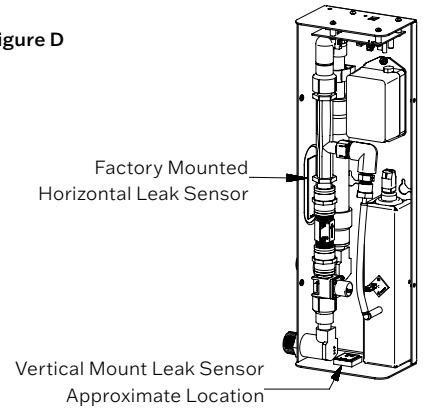

Figure E

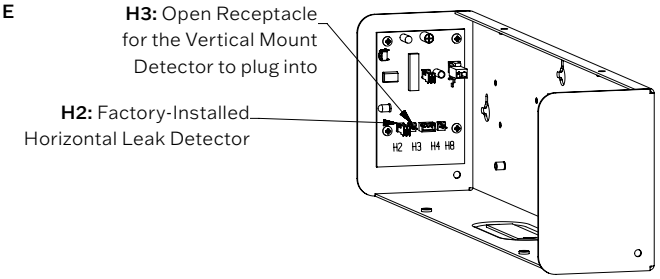

Reinstall the Cover

1. Return the ActivePure Laundry Pro 3.0 cover to its original position, fitting the bottom in place and tipping upward.

2. Secure with two (2) screws (not shown) along the top edge.

3. Put the two (2) remaining screws along the bottom edge and tighten.

NOTE: Remove the two black caps from the hose connections before installing hoses.

4. Return the ActivePure Laundry Pro 3.0 to hang on the wall onto the two mounting screws. Do Not plug power into the wall outlet at this time.

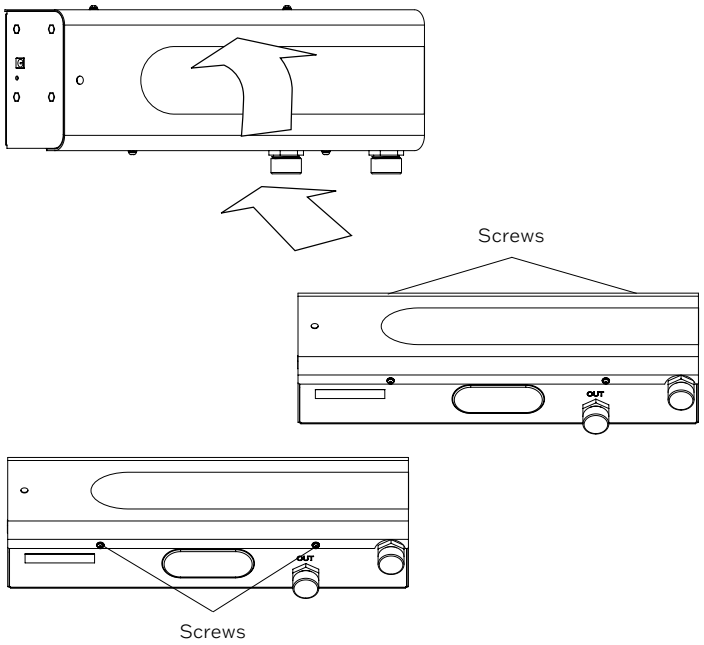

Connecting the Pressure Reducer

WARNING

- **DO NOT connect the Pressure Reducer to the Laundry unit, doing so will prevent water from flowing**
- **Check cold water faucet, Pressure Reducer, and cold water hose connections for leaking when the cold water is turned on, before continuing installation or moving the washer back into position**

CAUTION

- **When connecting hoses to your Laundry unit, start by hand tightening the hose connector(s); using adjustable pliers, finish tightening hose connector(s); Do not remove or disconnect the hot water line from your washing machine or water valve**
- **To ease hose installation and prevent cross threading, connect hose prior to mounting unit on wall**
- **If your existing hose is more than 3 years old, we recommend that you replace it with the optional stainless steel hose**
- **Check all hose connections for leak when the cold water is turned on before continuing installation or moving the washer back into position**
- **DO NOT remove the Laundry unit Cover**

The new Pressure Reducer will be placed between the home's cold water faucet and the Laundry unit's inlet hose.

1. Unplug the Laundry unit's Power Cord from the wall outlet.

2. Shut off the cold water supply to the washing machine by turning off the cold water faucet. **(Figure 1)**

NOTE: DO NOT remove or disconnect the hot water line.

3. Remove the cold water hose from the home's cold water faucet. **(Figure 2)**

NOTE: Adjustable pliers may be needed.

4. Connect the Pressure Reducer to the home's cold water faucet. **(Figure 3)**

NOTE: DO NOT connect the Pressure Reducer directly to the Laundry unit's inlet or outlet connections, doing so will prevent water from flowing. (Figure 4)

5. Connect the cold water hose from the washing machine to the end of the Pressure Reducer. **(Figure 5)**

NOTE: Start by hand tightening the hose connections. Use adjustable pliers to finish tightening the connections.

6. Turn on the home's cold water supply valve. **(Figure 6)**

(Figure 1)

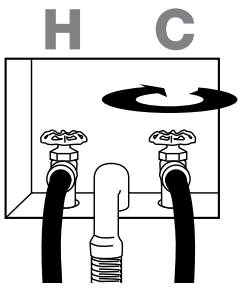

(Figure 2)

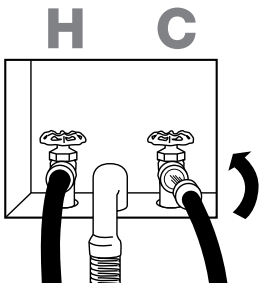

(Figure 3)

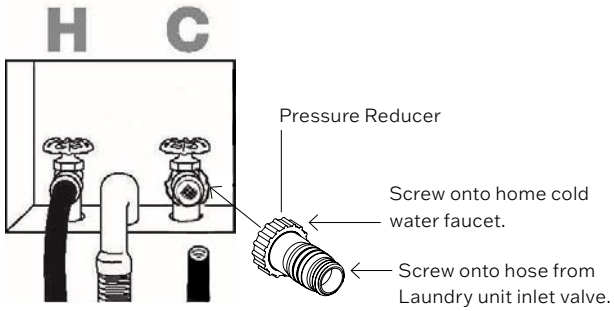

(Figure 4)

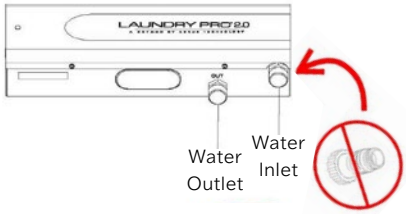

(Figure 5)

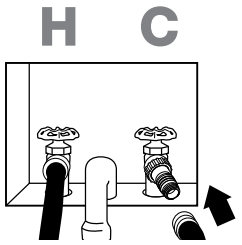

(Figure 6)

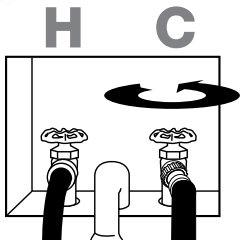

Hose Installation

CAUTION

- **When connecting hoses to your ActivePure Laundry Pro 3.0 start by hand tightening the hose connector(s); using adjustable pliers, finish tightening hose connector(s); DO NOT over-tighten**
- **Do not remove, disconnect, or turn off the hot water line from your washing machine or water valve**
- **To ease hose installation and prevent cross threading, connect hose prior to mounting unit on wall**
- **If your existing hose is more than 3 years old, we recommend that you replace it with the optional stainless steel hose**

1. Turn the cold water off by shutting off the cold water faucet. **(Figure 1)**

2. Remove the cold water hose from the cold water inlet on the back of your washing machine. Leave hot water hose attached. **(Figure 2)**

NOTE: To help prevent water spray when disconnecting hoses, you can relieve pressure in the water line by momentarily starting your washing machine.

3. Install the Pressure Reducer (see previous section).

4. Connect the hose from the cold water faucet Pressure Reducer to the INLET connection on your ActivePure Laundry Pro 3.0. **(Figure 3)**

5. Connect the new hose provided with your ActivePure Laundry Pro 3.0 to the water OUTLET connector on your ActivePure Laundry Pro 3.0 unit. **(Figure 4)**

6. Finally, connect the new hose to the cold water inlet on your washing machine. **(Figure 5)**

(Figure 1)

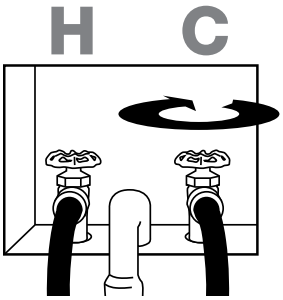

(Figure 2)

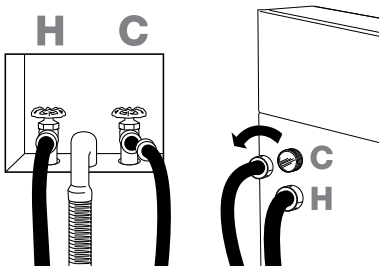

(Figure 3)

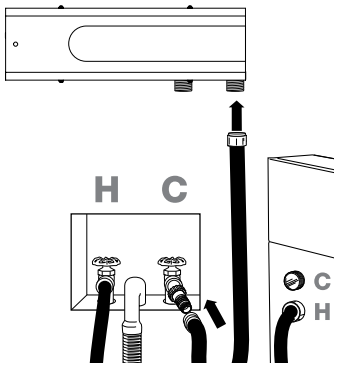

(Figure 4)

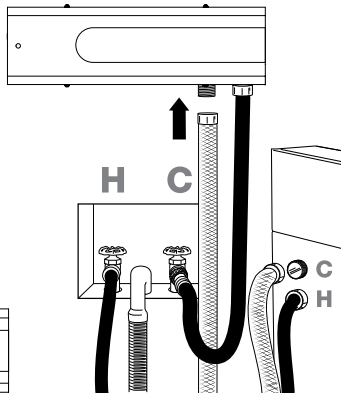

(Figure 5)

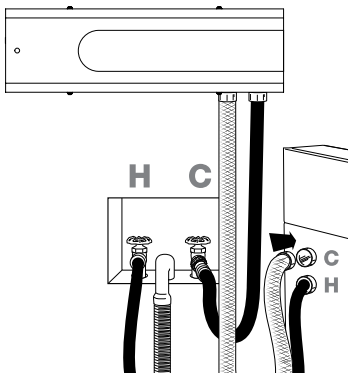

Connecting Power Adapter

WARNING

Do not use any AC/DC adapter other than the one supplied with your ActivePure Laundry Pro 3.0 or ActivePure replacement AC/DC adapter. Failure to follow these instructions may void your warranty and/or result in damage to your unit, fire, or electrical shock.

1. Insert the provided Power Cord into the POWER IN socket located on the side of the unit.

Note: **Do not plug the adapter into the wall socket until installation is complete.**

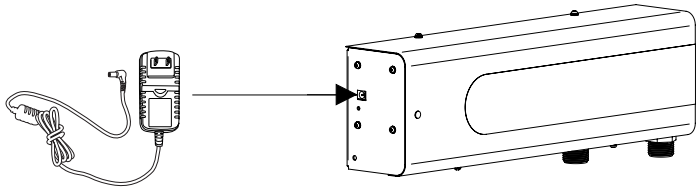

System Set Up

WARNING

- **Electrical Shock Hazard; when working with electrical connections, the appliance and surrounding area should be clean and dry of any standing water; failure to follow these instructions can result in death, fire, or electrical shock**
- **Electrical Shock Hazard; DO NOT use an extension cord; failure to follow these instructions can result in death, fire, or electrical shock**

CAUTION

It is recommended that the Power Adapter be connected to a surge protector in areas prone to electrical power spikes, transients or heavy lightning to protect the unit from damage.

1. Plug Power Cord into the wall outlet of your home's electrical power system. See page 4 for electrical requirements. When the power adapter is plugged in, the Indicator will be Green for a few seconds to indicate it is receiving power. **(Figure 1)**
2. Turn on the cold water valve. **(Figure 2)**
3. Check all hoses to ensure no water is leaking. Tighten if necessary. **(Figure 3)**
4. Start your washer. The status light should illuminate blue as water begins to flow. **(Figure 4)**

NOTE: **Your ActivePure Laundry Pro 3.0 will automatically turn on and off as your washing machine starts, and stops. It is normal for the UV bulb to remain illuminated for 15 minutes after water stops flowing.**

(Figure 1)

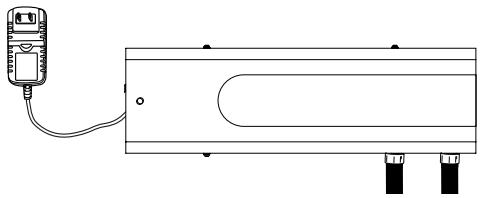

(Figure 2)

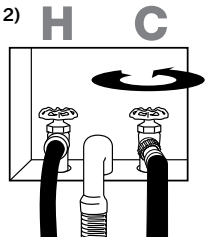

(Figure 3)

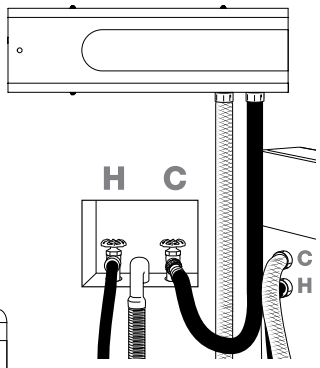

(Figure 4)

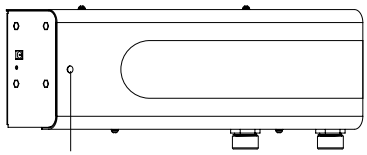

Status Indicator Lights

Installation Problems?

Installation procedures can vary according to washing machine model. If you experience installation problems, read the manual first to make sure you have installed the unit correctly. Contact Customer Service at 800.572.1446 for more information.

For questions on installation or troubleshooting please contact your Sales Representative or Customer Service at 800.572.1446 or email customerservice@ActivePure.com.

Before Washing Clothes

CAUTION

To avoid the possibility of water damage, should a hose leak, always have faucets accessible to be turned off if needed.

BEFORE USING YOUR ACTIVEPURE LAUNDRY PRO 3.0 FOR THE FIRST TIME

If your washing machine is new, skip this section and continue below.

If your washing machine is not BRAND NEW you will need to perform this procedure to help remove any detergent buildup that may contaminate your clothing.

1. Do not put clothes in the washer at this time. Set your machine to its largest load setting, cold water only.
2. Start the washer and let it run through every cycle.
3. Once it has finished, repeat Steps 1 and 2 three more times. Depending on the age and severity of detergent buildup, it may be necessary to perform Step 3 several times.

NOTE: If you have a front loading washer, odors can develop due to stagnant water left inside. If musty odors develop it may be necessary to run a commercially available cleaner made especially for front loading washers to eliminate such odors.

Using Your ActivePure Laundry Pro 3.0

NORMAL OPERATION

Using your ActivePure Laundry Pro 3.0 is as simple as turning on the washing machine. ActivePure Laundry Pro 3.0 is designed to use the COLD/HOT setting of your washing machine.

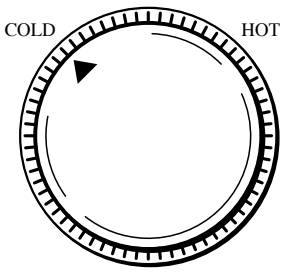

DETERGENT AND FABRIC SOFTENER

You may choose to continue to use detergent and/or fabric softeners if desired. However, to completely experience all the benefits of your new ActivePure Laundry Pro 3.0, we recommend washing using nothing but cold water. NEVER apply detergent directly to dry clothes. Allow washer to fill, then add detergent to prevent staining on clothes.

HEAVY STAINS

For heavy stains, pre-treat area, apply pre-treater, rub gently and let stand for several minutes. Wash as normal.

For Washers That Require Hot & Cold Water Input

CAUTION

- **Turn off both water valves (hot and cold) before disconnecting hoses; Failure to follow these instructions may result in water leakage and/or possible injury from hot water**
- **When connecting hoses to your ActivePure Laundry Pro 3.0 hand start the hose connector(s); using adjustable pliers, finish tightening hose connector(s); DO NOT over-tighten**

Some washing machine models require water pressure to both the Hot and Cold valves for proper operation. In some cases, if only the COLD water side is connected, the water valve will not operate or the washing machine will not fill to the proper level. To solve this problem, the installation of a "Y" adapter (available at most hardware stores) may be used. The use of the "Y" adapter allows water to flow equally through both the HOT and COLD water valves. Optional stainless steel hose must be installed on the hot water connection. To Install, turn water off at the valves and disconnect the existing HOT water hose (at the valve and washing machine). Connect the "Y" adapter to the outlet on your ActivePure Laundry Pro 3.0, then connect both the optional stainless steel hose and Cold hose from your washer to the "Y" adapter (see diagram below). Operate your washer on the WARM/WARM setting (your ActivePure Laundry Pro 3.0 will still be using just cold water).

NOTE: Your hot source water valve will not have a hose connected to it. Make sure it is fully turned off. It is recommended you secure a cap (available at most home improvement stores) to prevent leakage.

NOTE: The "Y" adapter needs to be purchased locally. Use only a metal adapter. DO NOT use plastic.

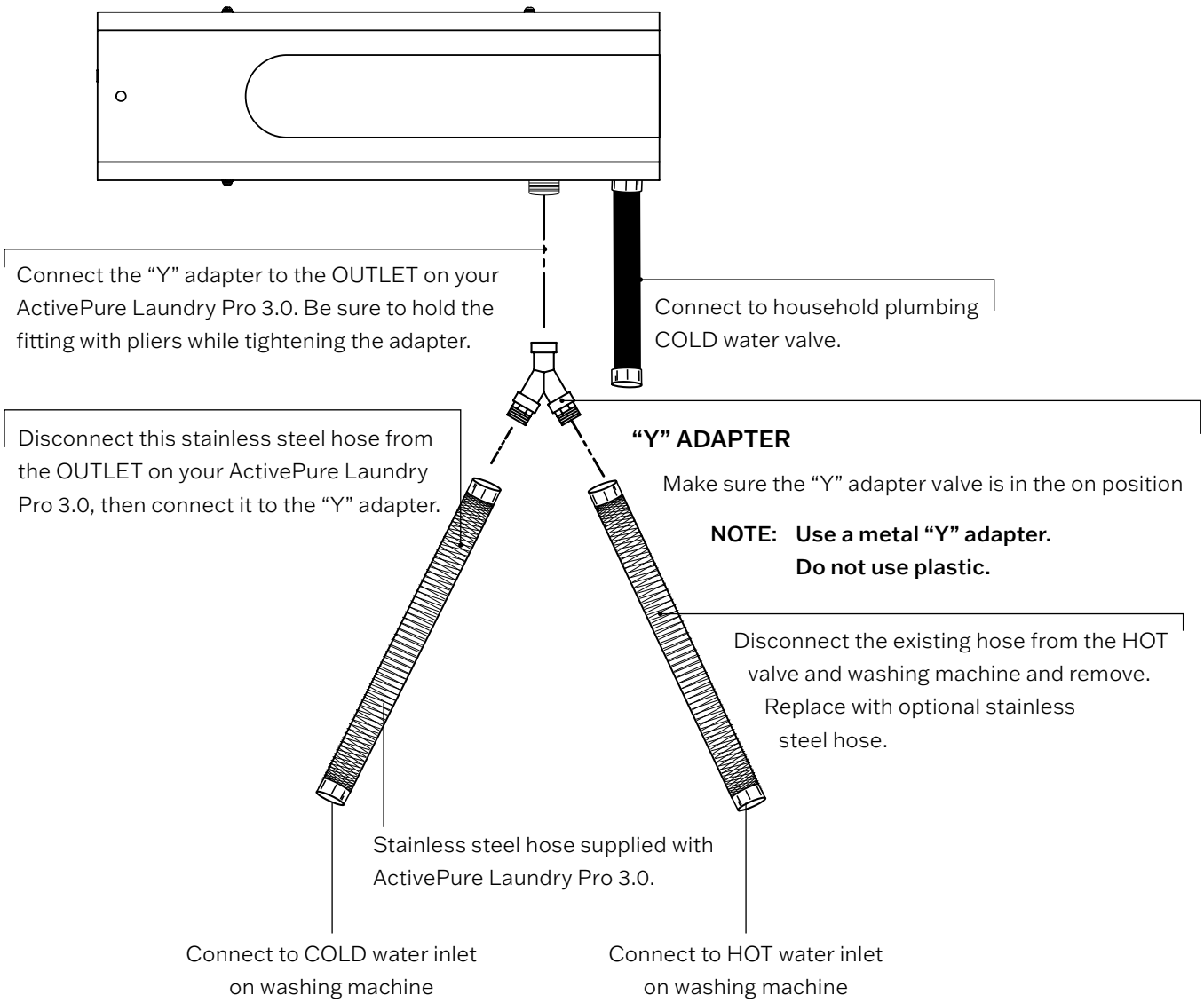

Temperature Controlling Water Valves

Some washers monitor the incoming cold water temperature and adjust too cold of water by adding hot water, even if the water temperature is set to cold. If you have one of these washers, do not install with the "Y" adapter as it may cause the washer to not operate correctly. Consult your washing machine owner's manual if needed.

Optional ActiveClean Port (available separately)

An optional ActivePure Laundry Pro 3.0 ActiveClean Port allows you to run cold water with hydrogen and oxygen based molecules for cleaning surfaces, without the cost of hot water and most traditional cleaning products.

Status Indications

WARNING

- **Electrical Shock Hazard; disconnect power before attempting installation or service**
- **Electrical Shock Hazard; when working with electrical connections, the appliance and surrounding area should be clean and dry of any standing water; failure to follow these instructions can result in death, fire, or electrical shock**
- **Do not operate ActivePure Laundry Pro 3.0 with the front cover removed or improperly installed; failure to follow these instructions can result in severe eye damage, death, or electrical shock**

The ActivePure Laundry Pro 3.0 monitors its operations with LED indicators:

LED Color	Description
Green	A. Illuminates for a few seconds when power is first applied or reapplied B. Several quick flashes when the reset button is pressed to indicate the reset was complete
Yellow	Comes on to alert that its getting near time to replace the Cell Assembly
Blue	Illuminates when water flow is detected and unit is in operation
Red	When continuously on, this indicates a fault with the unit
Red with alert tone	When flashing along with audible beeping this indicates a leak or high humidity condition exists
Off	No indicator illumination indicates standby mode

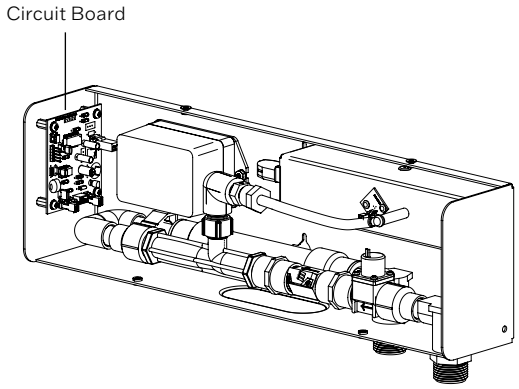

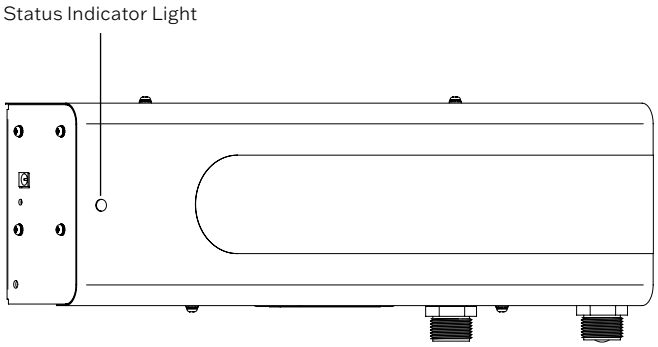

Replacing the ActivePure Cell Assembly

CAUTION

The ActivePure Cell Assembly requires replacement at approx. 4,000 hours of use. The LED will notify that Cell Assembly replacement is required.

1. Unplug from power source and remove mounted unit from wall.

2. Remove cover (see page 5).

3. Unplug photo sensor lead **(Figure 1)**.

4. Remove tubing from Cell Assembly **(Figure 2)**.

5. Unplug wiring harness from bulb **(Figure 3)**. Remove laundry unit from wall: Loosen the two mounting screws (see pg 6) approximately 1-1/2 to 2 turns, do not remove screws from wall, lift up the unit and then pull toward you.

6. Remove two screws to remove Cell Assembly **(Figure 4)**.

7. Replace with new Cell Assembly and remount to base.

8. Plug wiring harness back onto bulb.

9. Fit tubing back onto Cell Assembly.

10. Re-plug photosensor lead.

Figure 1

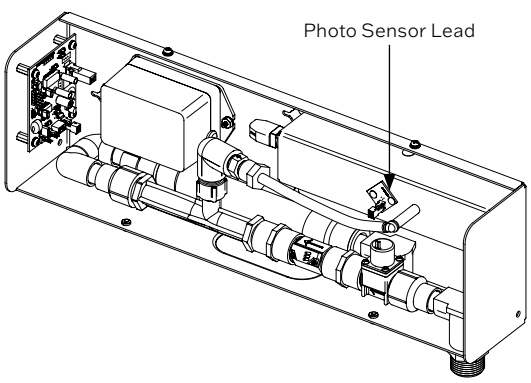

Figure 2

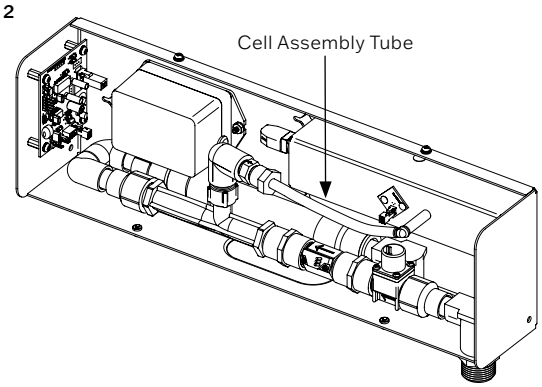

Figure 3

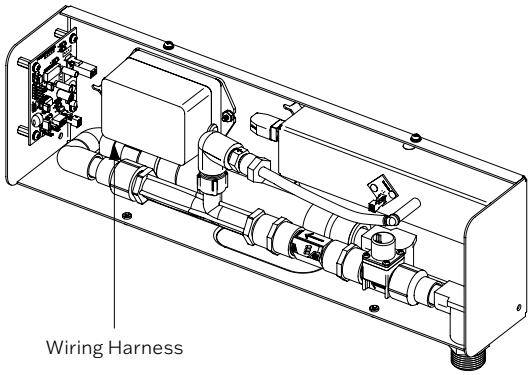

Figure 4

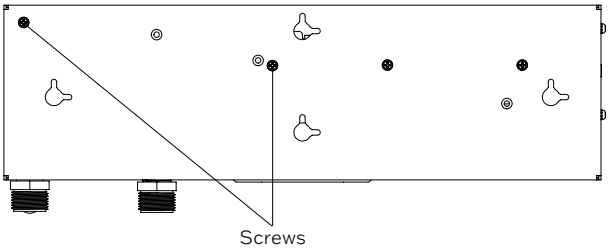

Replacing the ActivePure Cell Assembly (continued)

1. Plug laundry unit into outlet. Green light will illuminate for a few seconds. Wait for green light to turn off.

2. Press and hold Reset Button on Circuit Board for at least 5 seconds. Green light will flash several times.

Note: Black cover over the circuit board is not shown for clarity. Do not touch or tamper with any other components on the circuit board.

3. Replace unit onto wall, tighten mounting screws, attach the Cover (see page 7).

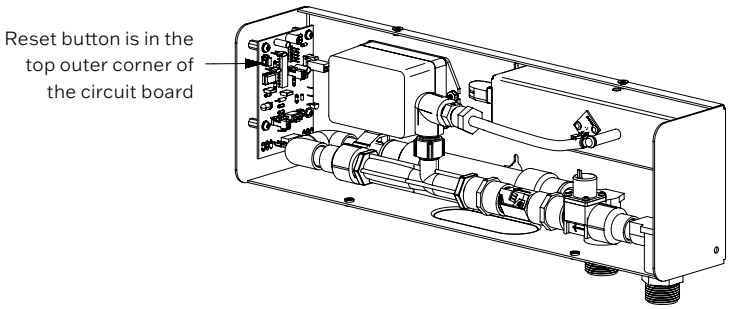

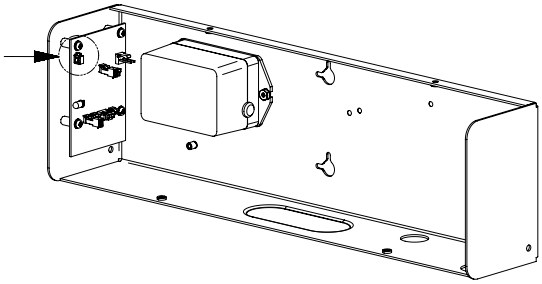

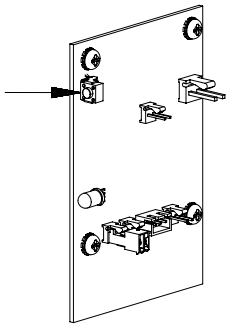

STORAGE AND DISPOSAL

Do not dispose of this product as household waste. Electrical waste and electronic products should be appropriately recycled as required by practices established by your local authority.

CHECKING THE CONTINUITY OF THE ACTIVEPURE BULB FILAMENTS

Check the continuity of the ActivePure bulb filaments with a Multimeter by placing the Multimeter probes on the ActivePure bulb pins that are closest to each other. The Multimeter should beep if the filaments are not broken. Resistance can also be checked if continuity is not available on the Multimeter. Resistance should be between 3 – 5 ohms. If continuity or resistance check is bad, replace the ActivePure® Cell Assembly.

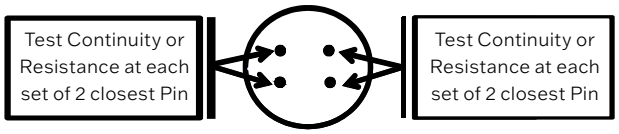

For questions on maintenance procedures, please contact your Sales Representative or Customer Service at 800.572.1446 or email customerservice@ActivePure.com.

Frequently Asked Questions

⚠ CAUTION	**We strongly recommend that a licensed plumber installs the ActivePure Laundry Pro 3.0.**

Does ActivePure Laundry Pro 3.0 get out tough stains without pretreating? Tough stains will still require pretreatment.

Does the ActivePure Laundry Pro 3.0 work with all types of water including hard water? ActivePure Laundry Pro 3.0 will work with all household water qualities, however additional sediment pre-filtering may be necessary depending on the source water condition.

NOTE: Never use with a Pre-carbon filter.

Will the ActivePure Laundry Pro 3.0 work with commercial washing machines? ActivePure Laundry Pro 3.0 is designed for residential use only.

Is a plumber required to install ActivePure Laundry Pro 3.0?
We strongly recommend that a licensed plumber install the ActivePure Laundry Pro 3.0. Water pressure MUST be checked and within stated specs before installation. It should be noted there are potential problems which can arise during the installation depending on the condition of the plumbing in the home and the configuration and location of the washer. If the cold water valve is stuck or the washing machine needs to be moved back which may require re-leveling, a plumber may be required. ActivePure is not liable for improper installation or damage caused from improper installation and recommends a licensed plumber. Appropriate warnings and concerns are included in this owner's manual. Always follow local plumbing codes when installing the ActivePure Laundry Pro 3.0.

Can I hook the ActivePure Laundry Pro 3.0 unit up to things other than a washing machine? No. However, ActivePure has an optional ActiveClean Port kit you can install on the ActivePure Laundry Pro 3.0 to create water with oxygen based oxidizers for other cleaning uses (see page 14).

What effect does ActivePure Laundry Pro 3.0 have on elastic?
Normal operation of a ActivePure Laundry Pro 3.0 unit should have no negative impact on elastic in clothing.

Can I let my clothes soak?
It is not recommended that clothes are allowed to soak in Laundry Pro 3.0 water.

Troubleshooting

LAUNDRY TOPICS:

LED Color	Illumination State	Meaning	Solution
Blue	Steady on	Water flow detected. Unit is operating normally	No action required
Yellow	Steady on	Early alert that Cell Assembly will need to be replaced soon	Order replacement Cell Assembly to have one on hand.
Green	Steady on / Few Seconds	Indicated power was connected to unit.	No action required
Green	Several Quick Flashes	Indicates the reset button was pressed.	No action required
Red	Flashing w/ Alarm	Leak, high humidity, condensation. Safety water valve closes.	Visible leak - repair as needed No visible leak A. Check for moisture condensation build up inside unit, correct if needed. B. Unplug unit for 10 seconds to see if condition corrects itself.
Red	Steady On	Unit fault detected	Bulb failed to start A. Unplug Power Adapter from unit, wait 10 seconds, reconnect power, then retry the unit. B. Verify temperature in area is not too cold. C. Check ActivePure Bulb Filament continuity (see page 14) Cell Assembly end of life reached - replace Cell Assembly Failed ballast - replace
None	Off	Unit in standby mode	No action required

Issue	Common Cause	Solution
Washer not filling, ERR code	Washer has cold water temp sensor	Make sure hot water hose is connected and fully on.
	Extra HE washer	Use “Y” connector on washer. Temp setting to warm.
	Kinked hose or water tap not fully open	Make sure the hoses are not bent or kinked. Verify cold water tap is fully open.
	Dynamic water pressure less than 20 psi	Connect to a water source with a dynamic water PSI greater than 20.
Odors	Source water conditions. Conditions can change throughout the year. Wells without chlorine can grow odor causing bacteria in the water.	Adding the Pre-filter can help in many cases.
	Mold / Mildew / Bacteria growth or stagnant water in washer – Front load machine worse than top loader but affects both.	At least monthly run a commercially available washer cleaner through the washer.
Clothes not clean	Overloading	Reduce the amount of clothing in the washer.
	Incorrect water level or wash cycle	Adjust to proper setting for amount and soil condition of clothing.
	Heavy soiled clothing	Add a small amount of detergent to wash.
	Source water pollutants	Adding the Pre-filter can help in many cases.

Troubleshooting (continued)

The table below lists common laundry questions compiled by the washing machine manufacturers and the solutions provided by the Laundry Pro 3.0.

Issue	Common Cause	Solution
White/Dark spots or stains	Grease from agitator bearing or seal	Grease from top load agitators can leak and deposit on clothing during wash. Older machines are more prone to this due to age.
	Fabric softener	Fabric softeners, the will leave a greasy stain if it comes into contact with clothing before FULLY diluted in water. Never pour directly on clothing.
	Iron, Magnesium in the source water	Minerals can cause clothes to stain. The LP Pre-filter may help for excessive minerals.
	Perfume or body spray/ lotion	Perfumes, body sprays or lotions contain chemicals that can cause stains.
	Overloaded	Reduce the amount of clothes being washed.
	Oils from rags or towels used to clean up spills	Wash separately. Make sure no oily residue is left in the washer as this will get on clothes in the next load.
	Filter on washer needs cleaned and/ or replaced	Some washers contain water filters that need regular maintenance. If applicable, make sure the filter is clean or replace as needed. Contaminates from the filter have been known to leach out and stain clothing.
	Low water	Adjust the water level.
	Excessive chlorine in source water	Adding the LP Pre-filter can help remove excessive chlorine from the source water.
	Dried detergent in washer coming off	Detergents can dry inside the washer. On the drum, under the agitator, between the inner and outer drum. When this dried detergent breaks free and contacts clothing, staining can occur.
White clothing turning grey over time	Mixing of colors	Whites should never be washed with other colors. Even light- colored clothing can transfer dyes, which will cause whites to grey.
	Bleach	If the source water is hard, bleach can react with some minerals in the water.
	Contaminates in water	Well water is more prone to issues than city water as it's not treated or regulated. Installing a LP Pre-filter can help with some source water issues.
	Overloading the washer	Front load washers are especially susceptible since they only use a small amount of water. Reduce the amount of clothing in the washer.
Holes in clothing after wash	Chemicals (Bleach)	Do not permit clothing to come into contact with bleaching or other harsh chemicals.
	Other clothing – contact with zippers, exposed underwire, objects not removed from clothing, etc.	Remove objects from clothing before wash.
	Mechanical – getting caught in the gap between the drum and door seal. Damaged inner tub surface.	This may require a washer repair service call to correct.

For questions on installation or troubleshooting please contact your Sales Representative or Customer Service at 800.572.1446 or email customerservice@ActivePure.com.

Replacement Parts

WARNING

Use only replacement parts recommended by the manufacturer.

REPLACEMENT PARTS	PART NUMBER
ActivePure® Cell Assembly.	49919
Steel Hose	49701
ActiveClean Port (Optional)	49693
Pre-filter Kit (Optional)	49771
Pre-filter (Optional)	49897
Pressure Reducer	50326
Vertical Mount Leak Sensor Service Kit (Optional)	50330
Ballast	49917
12V DC Power Adapter	49873

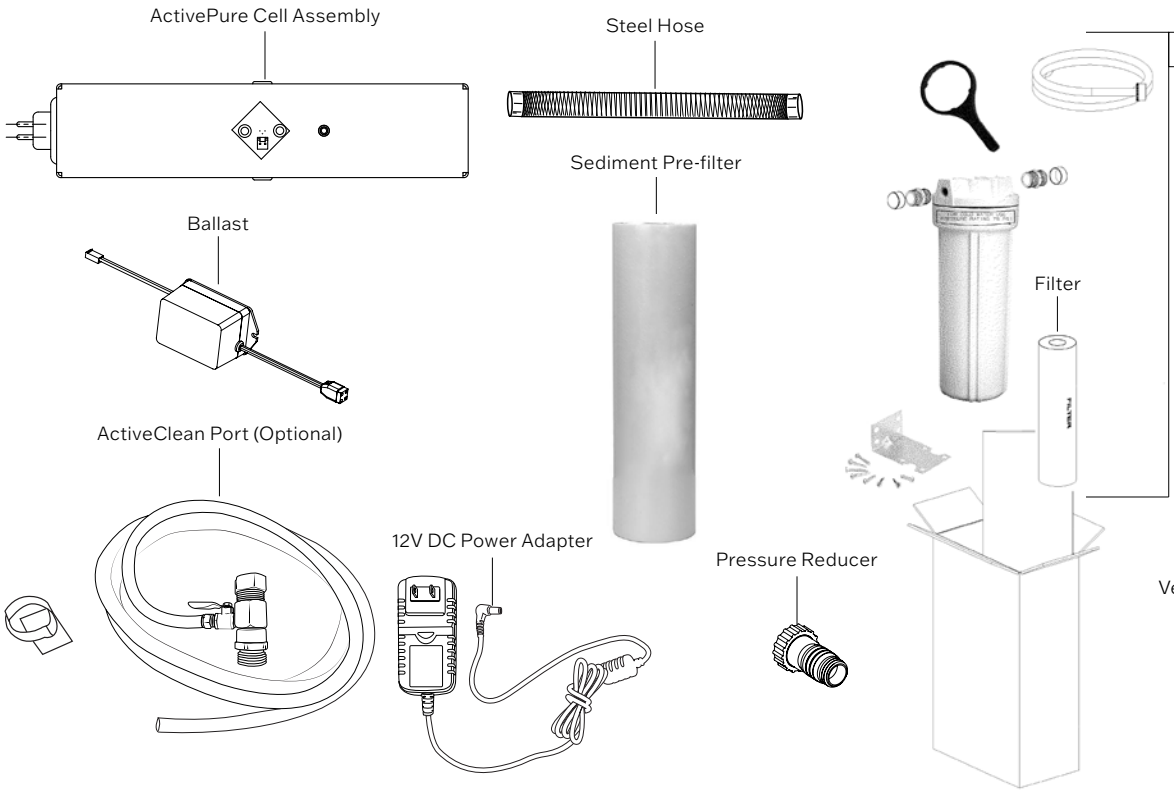

PRE-FILTER KIT (optional)

Items included:
High Purity HSG.
Filter HSG. W/SCR
Registration Card
Instruction Sheet
Sediment Pre-filter
Nylon Adaptor 3/4 MPT - 3/4 MHT
Water Connector Pack Cover
Carton
Corner Insert
Warning Label
Tape
Loctite #8702
Stainless Steel Hose
Filter Wrench
Bar Code Stock Label

To order replacement parts, please contact your Sales Representative or Customer Service at 800.572.1446 or email customerservice@ActivePure.com.

Warranty Information

Limit Three (3) Year Warranty

To register your ActivePure Laundry Pro 3.0 unit, please contact Customer Service at 800.572.1446 or email customerservice@activepure.com. To view full details of warranty coverage, visit activepure.com/manuals.

If you have any questions concerning this product, please contact your Sales Representative or Customer Service at 800.572.1446 or email customerservice@ActivePure.com.

FCC Declaration & Responsible Party

This equipment has been tested and found to comply with the limits for a Class B digital device, pursuant of part 15 of the FCC Rules. These limits are designed to provide reasonable protection against harmful interference in a residential installation. This equipment generates, uses, and can radiate radio frequency energy, and if not installed and used in accordance with the instructions, may cause harmful interference to radio communications. However, there is no guarantee that interference will not occur in a particular installation. If this equipment does cause harmful interference to radio or television, which can be determined by turning the equipment off and on, the user is encouraged to try to correct the interference by one or more of the following measures:

- Reorient or relocate the receiving antenna.
- Increase the separation between the equipment and receiver.
- Connect the equipment into an outlet on a circuit different from that to which the receiver is connected.
- Consult the Independent Contractor for help.

FCC DECLARATION OF CONFORMITY

Name: ActivePure Laundry Pro 3.0

Model: W1019A

Manufactured by: ActivePure Manufacturing, LLC

This device complies with Part 15 of the FCC Rules.

RESPONSIBLE PARTY

ActivePure Manufacturing, LLC
1300 Valley Drive,
Bristol, VA 24201

Ph: 800.572.1446

Signature:

Printed Name: Andrew Eide

Title: Vice President of Product Development and Manufacturing

Date: 09/23/2026

For information regarding the use of this product please contact your Sales Representative or Customer Service at 800.572.1446 or email customerservice@ActivePure.com

ACTIVEPURE.COM

© ActivePure Manufacturing, LLC. All Rights Reserved

ActivePure™

LP3.0_OM_65-01036_VA-02186D